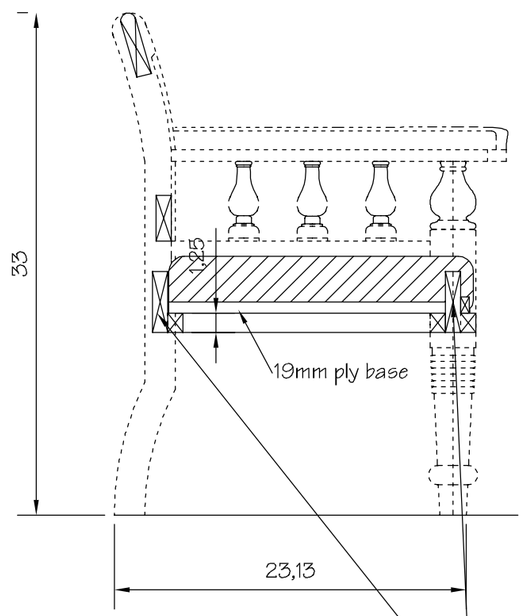

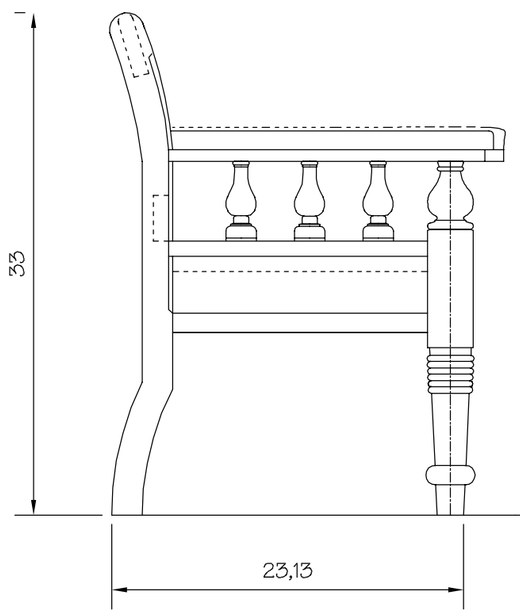

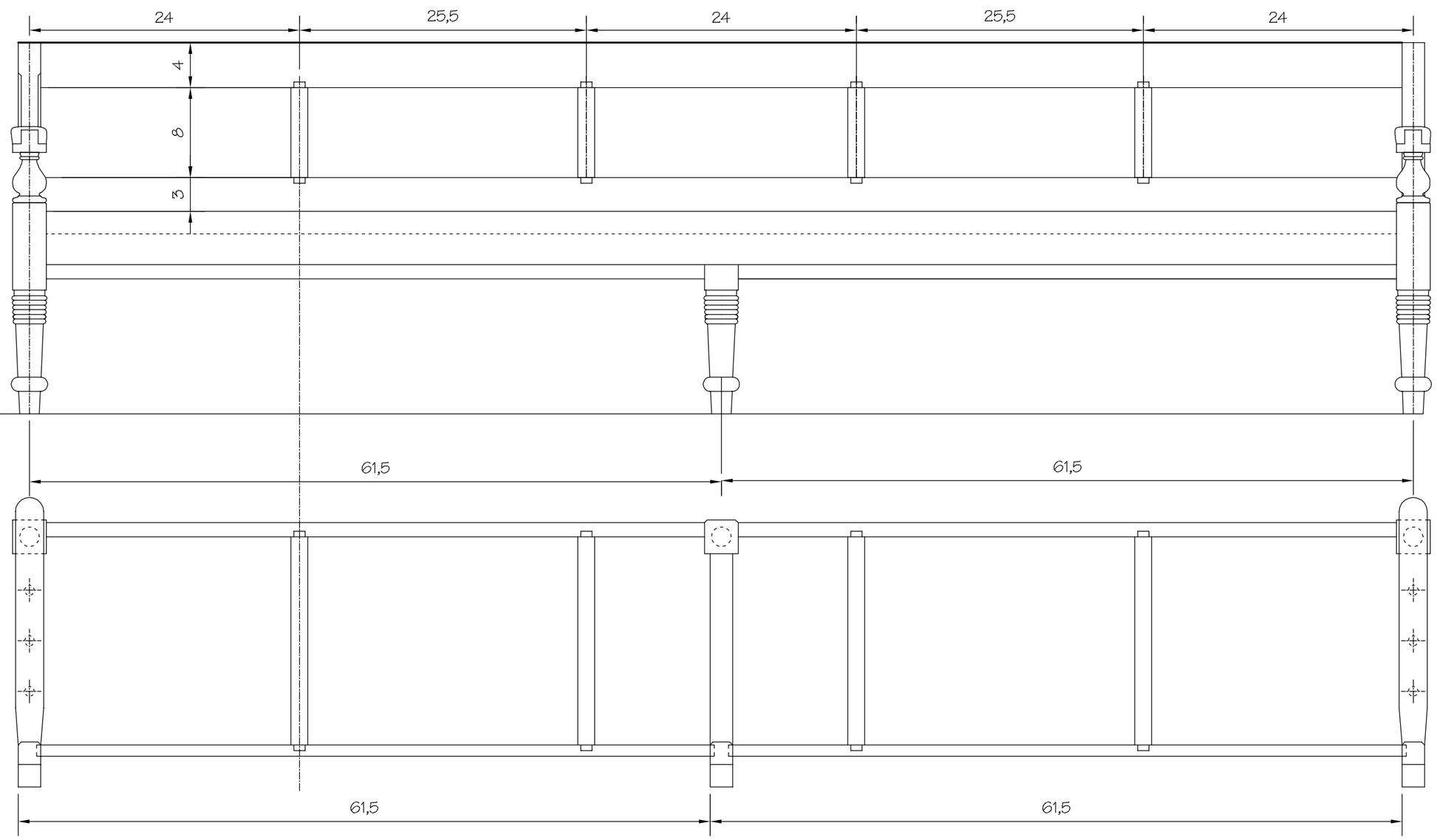

4x1" back and front members with battens to carry seat squab and extra batten at front to tack covering to with dome head brass pins

Chair at Weybourne, prototype for Midland Saloon No 3 internal seats. All dimensions in inches

PDF Created with deskPDF PDF Writer - Trial :: http://www.docudesk.com